GLONASS/GPS Tracker
MIELTA M7
(THA-1803-01)

User manual

Firmware version2.8.2
Last modified 05.11.2019

Tambov 2019

Table of content

1. Description

MIELTA M7 is designed for satellite transport monitoring. MIELTA M7 functions are collecting, processing, saving and transmitting sensor data to server on vehicles and stationary objects. With additional sensors connected allow to control fuel consumption, activity of executive devices, vehicle parameters, driver identification and more. The terminal is adapted to operate in any automotive on-board network, has built-in antennas for easy installation.

MIELTA M7 has all necessary hardware and software functions with acceptable price. Terminal is designed to solve your monitoring problem fast and reliable.

2. Technical specifications

Power supply	8 – 55 V. Power surge protection, reverse polarity protection, PTC fuse.
Power consumption	1 W average, 3 W max
Battery	800 mAh Li-Po battery, charging from USB cable and vehicle onboard power
Universal ports	4 ports Analog input mode: DC 0-36 V, input resistance 30 kOhm, 10 bit ADC; Discrete input mode: active level - 0V, internal pullup 3.3 V, input resistance 20 kOhm, frequency up to40 kHz, counter up to 1000000; Discrete output mode: open collector, DC current up to 200 mA, self-induction protection.
Accelerometer	Internal, 8G
1-wire	Internal, up to 8 devices
RS232	Internal
RS485	Internal, up to 8 devices
CAN 2.0b	Internal, ISO 15765-4
USB 2.0	Configure, firmware update, data transmission, power
Navigation	GLONASS, GPS, -166 dBm, internal patch antenna 25x25 mm / extrernal active antenna
GSM-antenna	Internal, 900/1800 MHz
Bluetooth	Bluetooth3.0, configuration, firmware update, data transmission
Memory	16Mb, 60000 track points, additionally Micro-SD up to 32 GB
SIM-card	1pcs, micro-SIM, hot swap, SIM chip option
Server data transmission	Up to 3 servers
Protocol	Wialon IPS 1.1, IPS 2.0, binary
Protection Rating	IP44
Operation temperature	-40 to+60 °C, humidity up to 98% at a temperature of 25 °C, without dew. Built-in battery charging: 0..+50°C
Averall dimensions	49 x 64 x 17mm
Weight	60 g

3. General information

3.1 Power supply connection

Tracker is designed for use in automotive on-board system 12/24V, or with USB adapter 5V 1A. MIELTA M1 also have a vehicle battery discharge control function which is designed to set Tracker to power-saving mode if predefined conditions occurred (onboard voltage value etc).

Built-in Tracker battery is dedicated for normal device operation in vehicle short power-down or onboard vehicle power fault conditions. Built-in Tracker battery cyclic charging / discharging operation is not recommended, early battery failure is possible.

For objects without constant external power (for example, powered from automobile auxiliary power outlet) it is recommended to set minimal timeout for built-in battery operation.

For transportation purposes Sleep mode is implemented. All periphery and modules are powered down. Sleep mode activation is performed by configuration software (by user interface) or by console command and powering down the Tracker within 10 sec after device indication turned off.

If built-in battery is discharged during Tracker operation, device automatically goes to Sleep mode.

To avoid early built-in battery failure long Tracker storing with plugged built-in battery and no external power is not allowed.

3.2 Configuration

The Tracker has a set of commands to configure settings that control the State and display information (see Annex 1). Tracker can be configured via USB port (configuration software), via SMS, the TCP commands from the server monitoring (GPRS), as well as Bluetooth (using Android Configuration software on the mobile device).

Default access password - 12345. If necessary, you can change the password. If you lose your password regaining access to the device is possible by contacting technical support.

3.3 Communication

The Tracker has a USB connector for connecting to a personal computer and used to power supply, configure and update software of the device. Micro-Fit 3.0 connector is used to connect the main power supply and peripherals. On the back side there is a schematic representation of the plug-in contacts (Figure 2). Before installation of the device, SIM card must be instaled. For this purpose it is necessary to unscrew the bottom cover of the

Tracker, which is attached with four screws. To protect against unauthorized access, the case is sealed up by a sticker.

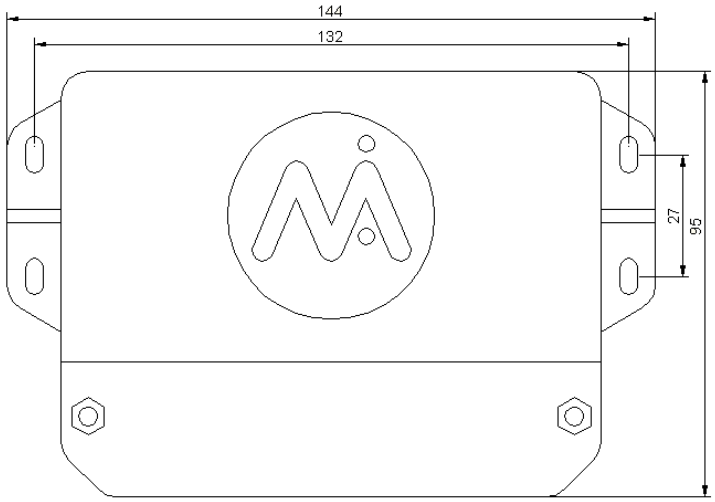

Picture 1 M7 exterior

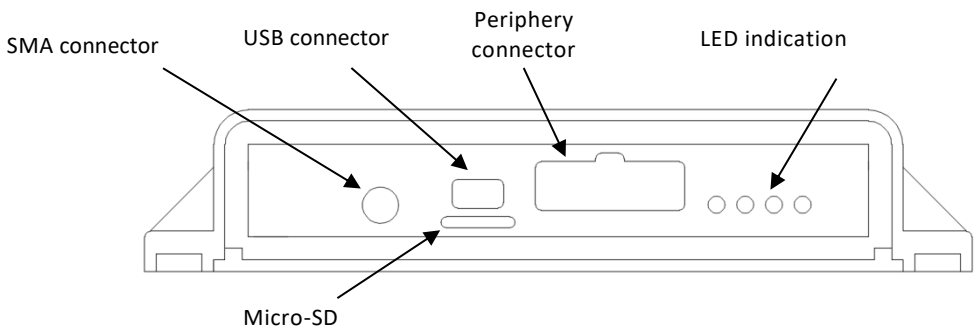

Picture 2 M7 front panel

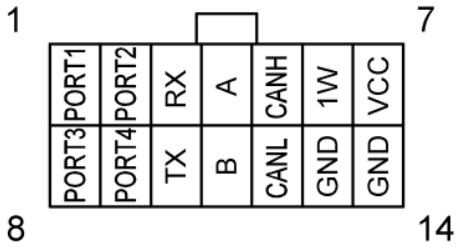

Picture 3 Peripheral Micro-Fit connector

Table 1 Peripheral Micro-Fit connector pinout

Number	Notation	Description
1, 2, 8, 9	Port1(2,3,4)	Universal ports 1-4
3, 10	RX, TX	RS-232 interface
4, 11	A, B	RS-485 interface
5, 12	CANH, CANL	CAN 2.0b interface
6	1W	1-Wire interface
7	VCC	Power DC 8 – 55 B

13,14	GND	Ground

3.4 Indication

Tracker Front panel has 4 LEDs: green, yellow, blue, red (see table 2).

Table 2. Normal operation indication

LED	Function	LED switched on	Blinking slow	Blinking fast	Blinked once
Green	Power on	External power	No External power, powered from USB	Black box clearing	Track point saving
Yellow	GLONASS/ GPS	Coordinates are fixed	Unstable GLONASS/ GPS signal	Time is not synchronized	-
Blue	GSM	Registered in mobile network	Problems with registration or SIM card	Registration in network	-
Red	Server	Connected to Server	Problems connecting to server	Activation of GPRS-session, connecting to the server	Sending data to server

LEDs indication:

1. All LEDs are switched on– normal operation;
2. Green blinking slow, red switched on –firmware recovery mode;
3. Green led blinks one time in 10 seconds, other switched off –power saving mode;
4. Blue and red LEDs blinks alternately –firmware update process;
5. Green and Red LEDs on first, then Yello and Blue on – go to sleep mode.

LED indication sequence:

1. Successful firmware start:
   - Red LED turns on (bootloader startup);
   - Red LED turns off, Green LED on (program successfully launched);
   - Firmware normal startup: connecting to the GSM and server.
2. Failed firmware start:
   - Red LED on;
   - Reboot.
3. Failedfirmware startafter update:
   - Red LED on for 30 sec;
   - Rebooting, several attempts for firmware download;
   - Restore previous firmware;
   - Regular start of the restored firmware.

3.5 General IO ports

General IO ports of the MIELTA M1 can operate in the following modes (see table 3).

Table3.Unversalports modes

1	Analog input	Voltage measurement, 0 – 36 V
		Ignition signal control
2	Discrete input	Frequency measurement, 1Hz – 40 kHz
		Low frequency measurement, 0.1Hz – 40.0 Hz
		Counter,frontedge, 0 –999999
		Counter, backedge, 0 –999999
		Discrete signal, 0/1
		Encoder (Port1 + Port2), 0 - 999999, increment, decrement
		Alarm button, 0/1, track point saving
3	Discrete output	0/1, i-button key activation, odometer impulse generator

The analog input is designed for voltage measurement and registration of slowly changing signals. Measurement of signal level occurs 20 times per second. The data smoothing algorithm is applied.

When you activate the ignition control function, you can select the signal source is one of universal ports either power network. In this mode, the Tracker monitors voltage and modifies the Boolean value of the "IGN" when passing through the established threshold voltages.

Binary input, designed to work with sensors and signal sources open collector type. High signal level limited voltage 36 V, low level should be no more than 1 V from GND. The Tracker has an internal pull-up to + 3.3 v.

In some cases, to improve anti-jamming and ensure a minimum load current of a frequency output of the external appliance, you must be connected pullup resistors with nominal 4.7-10 kOhm between the signal wire and power plus (no more than 36 V).

Tracker has two modes of frequency measurement - high and low, two modes of counting pulses with synchronization on the front and the recession signal, as well as logical status mode entry (entry by the mass closure gives «1»).

Encoder mode uses two ports simultaneously and can keep counting pulses from 0 to 999999 in two directions (increment, decrement). Used, for example, for compensation of oscillating movements of flow sensors.

Digital output is built according to the scheme "open collector" and is intended for actuating devices control. The following operating modes:

- manual mode (switch output status by the command);
- identification mode (change status to detect the iButton keys/RFID cards out of the allowed range);

- odometer impulse generator.

Before activating discrete output mode of the Tracker's universal port, disconnect all external circuits connected to this port.

Before connecting the external circuit, make sure that the current universal port in discrete mode will not exceed the maximum value of 200 mA.

3.6 Digital interfaces

Algorithm of working with digital sensors is built on traditional trackers MIELTA scheme with virtual slots. In Tracker defined slots for each digital interface (eight for RS485 and eight for 1-Wire), each of them can be configured on any sensor supported by tracker. The main advantage of this approach is flexibility, ease of configuration and the ability to simultaneously support various protocols on a single interface. Configuring sensors can be made during operation, do not interrupt the flow of data and does not require restarting. Data can be obtained immediately after correct setting up the sensor (using Configuration software, all changes can be tracked in real time).

Featured network settings for peripheral devices 1-Wire and RS-485 are given in tables 4, 5 and 6.

Table 4.Featured 1-Wire networksettings

Length of the line	The number of devices on the bus	Ttype of cable used	Topology
Up to 5 m	Up to8pcs	Any	Free
Up to 20 m	Up to8pcs	2x22(20) AWG UTPCat. 3-5e	Bus with patches up to 0,5 m
Up to 50 m	Up to 8 pcs	OnlyUTP, FTPCat. 3-5e	Bus only

Table 5.Recommended settings for the RS-485 network

Length of the line	The number of devices on the bus	Type of cable used	Topology
Up to 20 m	Up to8pcs	2x22(20) AWG UTPCat. 3-5e	Bus with patches up to 5 m
Up to 100 m	Up to8pcs	Only FTP, STP, S/FTPCat. 5-7	Bus with patches up to 2m

With a wire length more than 20 meters, you must use a 120 Ohm terminating resistor on the opposite end of the line from Tracker.

To ensure correct and safe operation of digital interfaces, ground potentials of Tracker and the attached devices must be connected, otherwise signal can be matched using an optical isolator.

Table 6. Recommended CAN network parameters

Length of the line	Type of cable used	Termination
Up to 0,5 m	CAN-BUS 1x2x0,34	Not obligatory. Depends from bus topology
From 0,5 to 5 m	CAN-BUS 1x2x0,34	Not obligatory. Depends from bus topology

For operation with CAN bus vehicle wiring is often used with length not more than 5 meters. In this case need for termination resistors is defined by experimental way.

More detailed instruction for CAN operation see in configuration software help.

4. Functionality

4.1 Communication

Tracker has communication module SIM868. Micro-SIM card holder is installed on PCB. For installation it is necessary to open the case. MIELTA M1 supports SIM card hot swapping without shutting down the power supply.

Built-in GSM modem works in the ranges 900/1800 Mhz, supports GPRS class B, multi slot 12/10. To activate the GPRS following options are provided:

- access point name;
- login;
- password.

If GPRS-session is active, MIELTA M1 starts the process of connecting to the monitoring server. Simultaneous work with three different servers is supported. To configure the connection, use the following options:

- Server address (possibly set up as an IP address, for example 193.193.165.165, and the DNS name of the server, for example hosting.wialon.com, the maximum length of the name is 63 characters for the main server and 47 characters for two additional servers);
- the connection port, depending on the Protocol (for example, 21204);
- the access password to the server, the maximum length is 15 characters;
- communication protocol (Wialon IPS 1.1, 2.0 and Wialon IPS binary protocol supported).

4.2 Track upload and traffic consumption

After successfully connecting to the servers Tracker starts to upload collected track data from built-in "black box". MIELTA M1 internal memory stores up to 10000 track records, which can be sent to server or uploaded by configuration software. Number of stored records to be sent to each server enabled by device configuration does not depend on the number of configured connections. The order of "black box" track points and messages upload is following: from newest to oldest. Tracker allow to upload up to 10 points in the packet.

Following data upload modes are provided:

- **Fast.** This type of uploading has maximal traffic consumption, however, allow you to track the object on the server with minimal delay. If the connection to the server is active, the track point to the server is uploaded immediately after registered by MIELTA M7.
- **Batch**. This type of track upload is a compromise between traffic consumption and delay between track point generated and received by server. This mode is specified by setting the maximum allowed delay for data uploading. That is, a packet is prepared for sending to server when a maximum delay after previous packet sent is occurred, or if the number of records in the “black box” is greater than the maximum possible number of points in the packet. In other words, if the black box is empty, the Tracker is waiting for the timeout to allow sending the next packet, and if the black box records accumulated, then the Tracker sends data packets without delays until it unloads all the records from the black mailbox.
- **Scheduled**. This mode is designed for reduced traffic consumption during track upload. Period for track data accumulation must be specified for this mode. Server connections in scheduled mode are inactive all the time except scheduled time when GPRS activates for all accumulated track data upload. After sending all track data Tracker close all the connections and returns to track data accumulation mode for given period of time. In data accumulation mode MIELTA M7 is available only by SMS commands.

Uploading track mode should be adjusted separately for home network and roaming. It should be noted that the more track points are packed in the packet, the lower overhead of packet headers and less traffic consumption. TCP connection is used for track data upload.

When track upload and track point registration settings are configured it should be noted that terminal supports keep-alive connection function to avoid connection closing by timeout. Ping packets are sent to server every 3 minutes if no track point is generated during this time. Keep-alive reduces traffic consumption related to connection closing and re-login.

Roaming track upload disable function is also implemented to reduce vehicle monitoring cost.

4.3 Data upload to multiple servers

MIELTA M7 is able to work with multiple monitoring servers simultaneously. For each server, you can separately specify any Protocol supported by firmware. To configure the connection enable option must be set. Also Server IP address (or domain name), Port and Protocol must be set. Password for server authorization and track upload mode are defined globally for all connections. Number of Track points stored in Black Box does not depends on number of Servers for sending and all the Track points are uploaded to all configured servers.

4.4 Time synchronization

After powered-up, MIELTA M7 must synchronize the system time with a source of accurate time. It can be done in two ways: request the exact time from mobile operator base station or receive from GPS / GLONASS satellites. It should be noted that time synchronization by base stations signal is not supported by all operators. From the moment power is applied and until the system clock is synchronized with the time source, the terminal stores track points in temporary memory. After synchronization, the terminal updates the time at previously saved points. If you turn off the power of the terminal until the clock is synchronized, then all track points from the moment of power-up will be lost.

Every minute the system time is compared with the time received from the satellites. If the vehicle is parked for a long time with a poor signal level of the satellites (garage, carport), then the system clock error may accumulate. If there is no satellite signal within 24 hours, the synchronization of the system time by base stations is allowed. The maximum error of the system clock in the absence of a source of accurate time usually does not exceed 1-2 seconds per day. If system clock error exceeds 15 minutes during time synchronization procedure, the message “WARN: RTC CLOCK” will be sent to the statistics server. With normal terminal operation, this situation is possible if the system time synchronization has not been performed for several years (long-term parking of the vehicle in a garage with a weak GSM signal and satellites).

4.5 Mobile operator selection

Two methods of mobile operator selection are implemented in MIELTA M1 for GPRS session activation:

- **Mode 1**: list of high priority operators (up to 150) + list of disabled operators (up to 50);
- **Mode 2**: list of enabled operators (up to 200).

Mode 1. MIELTA M1 starts to search available operators after power applied. If MIELTA M1 found high priority operator among available and if current operator is not in high priority list, terminal starts to register with in priority mobile network. If registering or GPRS connection activation failed then tracker tries to connect to the next high priority operator. If all high priority operators failed then tracker try to connect to any available operator. Disabled operators are ignored in this case. If all enabled operators are failed

registering then terminal try to register in disabled network, GPRS connection is disabled. In this case terminal is available only by SMS commands. Scanning for available operators executed every 15 minutes in roaming, every 2 hours in home network. If GPRS status sending to server option is enabled then text message is generated during operator switch.

Mode 2. In this mode MIELTA M1 activates GPRS connection only for operator within list of enabled. For other operators GPRS connection is disabled.

4.6 SIM card selection

When 2 SIM cards are inserted SIM selection is performed after mobile operator selection procedure. SIM card for operation is selected by several criteria listed below by priority reducing:

- SIM card presence;
- SIM card lock status (binding to Tracker);
- GPRS session activation ability;
- Cell network registration status;
- SIM card slot status (priority / disabled);
- Cell network signal level.

First, Terminal checks SIM insertion to slot. Then high priority is given to first SIM with successfully activated GPRS context even if that SIM is in roaming. If both SIM cards are able to activate GPRS context then high priority is given to SIM registered in home network. If both SIMs has same network registration status then SIM priority is selected from configuration. If one of SIM slots is disabled by configuration, terminal will operate only with card inserted in enabled SIM slot. In this case SIM card in disabled SIM slot is available only by SMS. A last criterion is cell network signal level. Note: if SIM card installed during SIM lock procedure war changed by another, it also will be disabled.

4.7 Track points registration

Three modes are provided for track points registering:

- Stop;
- Parking;
- Movement.

After power-up and time synchronization Tracker allows track points registration and switches to "stop" mode. Following settings are available for this mode:

- **Registration period.** Option for time interval for track point registration.
- **Switch to "Parking" mode time.** Sets the maximum time spent in "Stop" mode, after which the Tracker goes “Parking”. The main difference between these modes is that “Parking” mode has option for reduced power consumption, which will be described in the following sections.

Track point registration period is provided for "Parking" mode.

When Tracker registered that vehicle started to move it changes its state from “Parking” or “Stop” to "Movement". Two modes are provided for flexible track point

registration adjustment: “low speed” profile and “High speed” profile. First you need to specify boundary for velocity ranges, separating low and high speed. Such partitioning enables you to, for example, to specify different settings for traffic in the city and on the highway. Each profile has following settings:

- **Distance**. Sets the maximum distance relative to previously registered track point.
- **Angle**. Sets the maximum change of direction relative to previously registered track point.
- **Time**. Sets the maximum time between track points registration.

For the "Movement" mode track point registration options for speed limit exceed are provided:

- **Speed limit**. Sets the maximal allowed speed of an object, by exceeding which track point is generated.
- **Speed limit increment**. Sets the speed limit increment for which track point is registered.
- **Acceleration threshold.** Track point is generated during sharp acceleration or braking the vehicle. Threshold can be set in range [1.1..8.0]
- **Ignition state change**. Track point is generated during ignition state changing. Input and voltage threshold level can be adjusted.

4.8 Switch to Parking mode

It is possible to set one or several conditions for switching to Parking mode from Stop mode:

- By GPS zero-speed timeout (default condition);
- By ignition status;
- By accelerometer sensor (waits for accelerometer “Stop” status).

If multiple conditions are selected switching to Parking mode is performed when all the selected conditions are obtained (logical AND). If no conditions selected then Parking mode is disabled. For every type of condition Track point registration options are provided.

4.9 Filtering false GPS coordinates

MIELTA M7 provides “GPS Filter” which is designed to prevent Track point registration with low accuracy coordinates. This filter has following settings:

- Maximal HDOP value;
- Minimal number of satellites.

Filters by acceleration sensor and by ignition status are provided to prevent "false travel" and "track stars" during parking. Filters can be independently enabled and disabled. If both filters are active, coordinates freeze at parking is most reliable. But for unforeseen cases (for example, vehicle evacuation) GPS distance control is provided and Tracker will register the track in any case. One of General IO Ports or onboard voltage value can be used to control the ignition status. Hysteresis is provided for voltage value. For parking in areas

with weak satellite signal it is recommended to disable coordinates transmission to filter the "track stars" by disabling coordinates transmission in Parking mode. If only acceleration filter is used then following restriction for Track point registration in parking mode is used: if number of visible satellites is less than 12 and HDOP is less than 0.8, Track points are generated without coordinates.

4.10 Power-saving modes

Three energy modes are implemented in Terminal:

- **Main mode**. In this mode Track points registration and sending to server are performed according to Tracker settings.
- **Power saving mode**. Dedicated for battery saving during parking, excluding data loss. That is, data registration from sensors and GPS-receiver does not stops but GSM module is powered off. Powering on is performed once per hour for 15 minutes for accumulating Track data upload. If Tracker in roaming and track upload is disabled in roaming then GPRS session is not activated. GSM module is turned on in this case for checking inbound SMS commands. Power saving mode is activated automatically in Parking mode.
- **Sleep mode**. Dedicated for long-term parking. In Sleep mode Tracker periodically controls the value of the supply voltage, other functions are not available. If Tracker is powered directly from the battery of the vehicle and if assumed long parking between vehicle rides, it is recommended that option "Enable sleep mode on parking" is checked. Two thresholds are available for setup: “Enter sleep mode" voltage and “Exit sleep mode” voltage. That is, onboard voltage is higher when vehicle engine is turned on than for stopped engine.

4.11 Tracker configuration methods

Tracker configuration is done using the text console commands. To access the Tracker you must enter a password. In cases of password loss, you can enter the master password. Ask for it from MIELTA technical support. Master password has a limited validity period.

Several ways to configure the Tracker are provided:

- TCP commands;
- SMS commands;
- PC configurer utility (by USB);
- Android configurer utility (by Bluetooth).

Configuring by TCP or SMS commands is performed by sending text console commands to Tracker. It is possible to send multiple commands in a single message, with commands written in execution order. Commands are delimited by a semicolon. A full list of commands is given in Annex 1.

Working with Mielta Tracker in console mode starts with user authorization *pwd* command. All commands except for *pwd* and *logout* returns *OK* or *ERR* after command processed. *OK* indicates that the command completed successfully, *ERR* means that an error occurred while executing the command or command is entered incorrectly. In the Tracker, there are several users, for each independent authorization is required: 1. Phone (SMS) 1; 2. Phone 2 (SMS); 3.Phone (SMS) 3; 4. Phone (SMS) 4; 5. USB (command line); 6.Bluetooth; 7.TCP (monitoring server). Simultaneous work with multiple Tracker users is allowed. A list of phone numbers enabled for authorization can be requested by *get phone* command, set new phone number - *set phone* command.

After entering correct password, access granted to execute commands. After 30 minutes of inactivity session automatically closes. Session can be also closed manually by corresponding command (*logout*).

Table 6. Configure monitoring server connection parameters example:

Command	Ansver
pwd 12345	*Welcome! User logged in*
set server 0 on 193.193.165.165 20332 IPS_2_0	*OK*
set pwdservermielta	*OK*
rebootall	

Table 7. Sensor configuring example:

Command	Ansver
pwd 12345	*Welcome! User logged in*
set sensor R4.1 LLS Fuel 1 1 3	*ok*
set sensor OW1 DS1820 Temp 1 1 987654321	*ok*
logout	*Good-bye! User logged out*

To configure by USB or Bluetooth corresponding desktop Windows and mobile Android configurers are designed. Configurer also displays real-time sensor data.

Work with Android configure starts with Bluetooth access points search. If necessary devise selected program requested to enter Bluetooth connection PIN code, after that you should enter access to terminal password. After entering the correct password Configurer has access to Tracker.

Tracker in the Windows operating system is defined as a virtual COM port. By clicking the "device selection" in the Configurer displays the search window, where you can view all found trackers. After necessary device selected and correct device access password entered software starts to request data from Tracker and display on user interface. Windows software has following additional functions:

- Tracker firmware update from file;
- Uploading the track records from Black box to file;
- Tracker settings import/export to file.

4.12 Bluetooth access point

Bluetooth connection configuration has following options:

- **PIN**. You need to initialize the connection via Bluetooth.
- **Access point name**. Should be set to identify the Tracker during devise search. By default, the name is defined as a device IMEI.

Multiple modes of operation are implemented:

- **Disabled**. Bluetooth access point is unavailable.
- **Enabled until restart**. Activates the access point until you restart Tracker.
- **External power on**. The access point is activated every time when you disconnect and external supply voltage (even if you are reconnecting Tracker continues to work from the built-in battery). Access point after reconnecting the power active 15 minutes, and if during that time was not Bluetooth connection after this time is disabled.
- **Always on**. Bluetooth access point always available.
- **Speakerphone.** Bluetooth is used to connect to the headset for voice communication (see section 4.10).

Bluetooth access points work on the Tracker practically does not affect the unloading track and the rest of the functional GSM-module that allows you to connect your Android device and use it as a monitor sensors in real time.

4.13 Bluetooth headset support

To receive voice calls, you can connect a wireless headset. To do this, in the “Communication” menu of the configuration software in the “Bluetooth Settings” section, select necessary mode and click the “Write settings”. To pair with a wireless headset, click the Configure button, search for available devices, and select the desired device. After clicking the “Write settings” button, the MAC-address of the selected device will be stored in the terminal memory. The terminal will automatically connect to the selected device, if available. An incoming call is answered automatically. If the headset is not used, hands-free mode should be turned off.

4.14 Digital sensors configuration

Each of RS-485 and 1-Wire interfaces have eight slots and supports up to 8 digital sensors. One slot on RS-232 interface.

To work with the sensor, you must select the corresponding slot of the interface, choose sensor type, specify the required settings (bus address, data type, etc.). One sensor can be selected within the slots. For example, the fuel level sensor produces 3 parameter (fuel level, frequency and temperature) by adjusting the three slots on the fuel level sensor for each data type, we get all three measurement parameters and send them to the server monitoring.

A packet of data sent to the server is created automatically, depending on the availability of active slots. On the server slots are denoted as follows: R2.1 for RS-232, R4.1, ..., R4.8 for RS-485 and OW.1, ..., OW.8 for 1-Wire. For example, the first slot RS-485 and 5-th slot 1-Wire bus on the server is as follows: R4.1 = 4096, OW.5 = 123456. For some types of sensors available possibility to receive 2 parameter with a single slot, in this case, the slots on the server will have the following designations: R4.1.1, 4.1.2,..., R4.8.1, R4.8.2.

4.15 Working with Mielta system display

The Tracker supports display MIELTA connected by RS-485 bus. The system display is used to display the overall Tracker status, connection parameters, data from different interfaces, specially adapted for work on stationary and mobile gas stations. Tracker supports up to 8 displays on bus system, each of them can display different data. The display is connected to one of the RS-485 port slots with the address, similar the sensors.

4.16 Working with “ATOL” tachograph

Terminal supports *.ddd file upload from ATOL Drive 5 tachograph by “Penal” protocol. Tachograph device type can be selected in the list of peripheral devices on RS-232 interface. *.ddd files upload supports Wialon hosting and Wialon Local servers. Tacho manager app should be installed on server. File can be uploaded from tacho on server by request. Request format is defined by Wialon IPS 2.0 protocol. In the request in field “Driver ID” should be specified FirstName SecondName of the driver equal to specified driver’s card. If TCP connection lost during file upload server returns error and upload should be started again by request.

Terminal has tacho upload problem diagnostics. Messages with errors are saved to Black box and uploaded to server. Full list is in following table.

Table 9. ddd file upload error list:

N	Message	Description
1	MSG: 'ddd' file upload: OK	File successfully uploaded
2	ERR: 'ddd' file upload: tacho not found in sensor slots	No slot assigned to tacho
3	ERR: 'ddd' file upload: driver not found in card slots	“FirstName SecondName” was not found in tacho card slots
4	ERR: 'ddd' file upload: driver card ejected	Driver card was ejected from slot during file upload
5	ERR: 'ddd' file upload: server connection lost	Wialon server connection error
6	ERR: 'ddd' file upload: serial port connection problem	Tacho stopped responding during terminal requests
8	ERR: 'ddd' file upload: operation cancelled by user	Tacho restricted terminal access to driver card during upload by user by tacho front panel
9	ERR: 'ddd' file upload: tracker not	Tracker is not ready to download *.ddd file (for example,

	ready	time is not syncronized on terminal)
10	ERR: 'ddd' file upload: unknown error	Unknown error

4.17 Working with CANlog (P145)

M7 supports CANlog (P145) connected by RS-232 port. In this case R2.1 slot returns CANlog connection status. If status equal to zero, then CANlog connected normally. If status is less than zero then CANlog has connection problems (= -1) or setup problems (= -2). CANlog data is sent to server by separate data fields with prefixes, according to CANlog documentation. Tracker has restriction for number of prefixes sent to server. That is why just necessary prefixes should be selected during CANlog setup. It can be done by configuration software or by TCP / SMS text commands. Additionally, terminal can set CANlog program to select vehicle type or send command to restart CANlog.

Set of parameters for sending is configured by configuration software. To increase number of allowed parameters to send Black box record size must also be increased, see set/get bbcfg command description.

4.18 Working with CANFMS-3

M7 supports CANFMS-3 CAN logger. Operation with CANFMS is similar to CANlog except logger reboot function and vehicle type selection. Vehicle type is selected by logger configuration utility. R2.1 slot returns connection status (0 – normal operation, -1 - connection problems, -2 - setup problems).

Set of parameters for sending is configured by configuration software. To increase number of allowed parameters to send Black box record size must also be increased, see set/get bbcfg command description.

4.19 Working with PressurePro APM1 pressure control system

M7 supports PressurePro wireless pressure sensors. Value reading from wireless sensors is processed by PressurePro AMP1 monitor which is connected by RS-232 to the terminal. RS-232 must be configured for the PressurePro. R2.1 slot returns number of connected wireless PressurePro sensors. Terminal supports up to 34 sensor values sending to server. Values are sent in psi (1 atmosphere = 17.7 psi) for pressure (P). Temperature zone values (T) are also sent to server, each temperature zone is 20°C wide. Server notation for measured values is: P1=15,T1=3. For temperature estimation following formula is used: T=(n-2)*20°C (i.e. T1=3 means tire temperature is estimated in 20..40°C range). Only active sensor data is sent to server, that is why after R2.1 slot setup for PressurePro no other options are required.

4.20 Working with PressureProPulse pressure control system

M7 supports PressureProPulse wireless pressure sensors. Value reading from wireless sensors is processed by PressurePro AMP1 monitor which is connected by RS-232 to the terminal. RS-232 must be configured for the PressurePro. R2.1 slot returns number of connected wireless PressurePro sensors. Terminal supports up to 160 sensor values sending to server (Unit0..Unit9). For storing all the data in memory increase Black box record size can be required. For storing Unit0 data Black box record must be increased up to 512 bytes, for Unit0..Unit3 – 1024 bytes, Unit0..Unit9 – 2048 bytes. See set/get bbcfg command description. Set of units is configured by configuration software.

4.21 Working with external navigation data source

Terminal supports NMEA0183 protocol by RS-232 interface. For external navigation data source operation R2.1 slot should be configured for “Ext. GPS receiver”. For the GPS data source following options must be applied:

1. Baud rate – 9600 bps;
2. Parity – none;
3. Stop bit – 1;
4. Navigation data rate – 1 Hz;
5. Sent messages type: “GGA”, “VTG”, “GSA”, “GLL”, “RMC”, ‘zda’, “GSV”. Slot R2.1 returns value HDOP*10 (R2.1.1) and number of satellites (R2.1.2).

4.22 Working with fuel-metering device Eurosens Delta RS100

To operate with MIELTA M7 fuel-metering device must be configured with following options:

1. Digital output – RS232;
2. Protocol – MODBUS;
3. Automatically data sending – none;
4. Baud rate – 19200;
5. Device address – 1.

R2.1 slot should be configured to work with Eurosens. R2.1 slot returns connection status (0 – normal operation, -1 - connection problems, -2 - setup problems).

Set of parameters sent to server is configured by configuration software. For increasing number of parameters for sending storing data Black box record must be increased. See set/get bbcfg command description.

4.23 Working with ZET7012 pressure sensor

To work with the sensor, it must be pre-configured using the appropriate program (ZETLab). To work with the terminal, set the baud rate to 19200 bps, then connect the sensor to the terminal. In the settings of the RS485 slot specify the type of sensor and

address. The measurement result is displayed with an accuracy of three decimal places. This result must match the value on the “Measurements” tab of the ZETLab program.

4.24 Working with ADM20 RFID reader

After setting one or several RS485 slots for reader corresponding slot returns RFID card ID (Mifare / EmMarin) or radio-tag ADM21 ID.

4.25 Driver identification

Driver identification function with RFID cards or iButton keys is supported. At least one sensor with «IBUTTON» type should be configured. Identification setup Is performed by *set iomode* command. Command sets the range of values allowed for identifiers. If the attached key allowed, there is a change of State of a discrete output occurs.

4.26 Manual control of discrete output

Following command is provided for discrete output manual control:

Setiomode <ionum> <mode>, where the *mode* parameter can have a value:
dout_on - digital output: output open
dout_off - digital output: output is closed

4.27 Discrete input

For the "digital input" universal ports there are five sub-modes:

- Frequency measure with an accuracy of 1 Hz for band 1-40000 Hz.
- Frequency measure with an accuracy of 0.1 Hz range 0.1-40.0 Hz.
- Counter. For this mode, in addition, counter reset option is provided.
- Encoder. Dedicated for rotation sensors.
- State. In this mode, a monitoring server is sent to the binary status (0 or 1).

4.28 Alarm button

Alarm button function is intended to send an emergency events. Each universal port can be used to connect the alarm button. When a button is pushed Black box record is generated and sent to server. Additionally, you can configure the text message associated with the event to send to the server monitoring.

4.29 Odometer

Terminal software has function for calculating traveled distance based on the received navigation data. The calculation does not depend on the registration of track points. The traveled distance is stored in the terminal’s memory with an accuracy of 1 meter, but it should be noted that the accuracy of distance measurement depends on the accuracy

of determining the coordinates, i.e. ultimately it depends on the HDOP parameter and the satellite signal quality. In good conditions, the error does not exceed 1%. The error may increase if the track consists of many turns (excavator, loader). You can send to the statistics server the absolute value of the traveled distance or relative. When sending a relative value, the traveled distance since the previous registered track point is saved at each track point. Absolute value is sent in kilometers, relative - in meters.

4.30 Power saving modes

Conditions for Sleep mode switching are following:

1. When USB cable is connected to PC Sleep mode is disabled;
2. If built-in accumulator operation timeout is not set, Tracker goes to Sleep mode after its voltage decreased below 3.7 V.
3. If built-in accumulator operation timeout is set, then Sleep mode activates after given time or if built-in accumulator voltage decreased below 3.7 V.
4. External power voltage thresholds can be set for enter and exit Sleep mode. Higher voltage value is set to exit Sleep mode, lower value – to enter Sleep mode (hysteresis)

During Sleep mode activation Black box record is generated.
For MIELTA M1 models without built-in accumulator conditions 2 and 3 are not valid.

4.31 Diagnostics

The terminal has several diagnostic commands that can identify some equipment malfunctions, such as problems with GPS/GLONASS reception or loss of communication with the sensor. A complete list of diagnostic commands is given in the table “Diagnostic commands” of Appendix 1.

4.32 Working with MicroSD

To extend internal memory for Track Points storing MicroSD support is implemented in MIELTA M7. Terminal supports MicroSD cards up to 32 GB formatted with FAT32 file system.

5 Firmware update

There are several ways to update the Tracker:

1. Update via USB through the Configuration software.
2. Remote Update: command "*serupdate N*" should be sent to Tracker by any method described above (by TCP, SMS or Configuration software). N is the version number of the firmware on the server. During update Tracker continues to work in normal mode. Firmware update status can be requested also by SMS, TCP or

Configuration software (see the description of the command "*get statusupdatefw*"). After downloading the firmware Tracker restarts. For remote update (by TCP or SMS) to prevent track data loss during vehicle moving downloaded firmware updates only in Parking mode. To force Tracker reboot to update with downloaded firmware command "*rebootall*" should be sent.

In case of Tracker firmware damage and if firmware upgrade is not possible with regular way, firmware recovery mode is provided. To restore, you must close the jumper the two special contacts on Tracker PCB (see Figure 4), connect the PC USB cable (USB port on the computer must provide the power), run the recovery utility on the PC. This utility writes base version of the software to the device which is able to restore the basic functionality of Tracker to install the current version in the regular way.

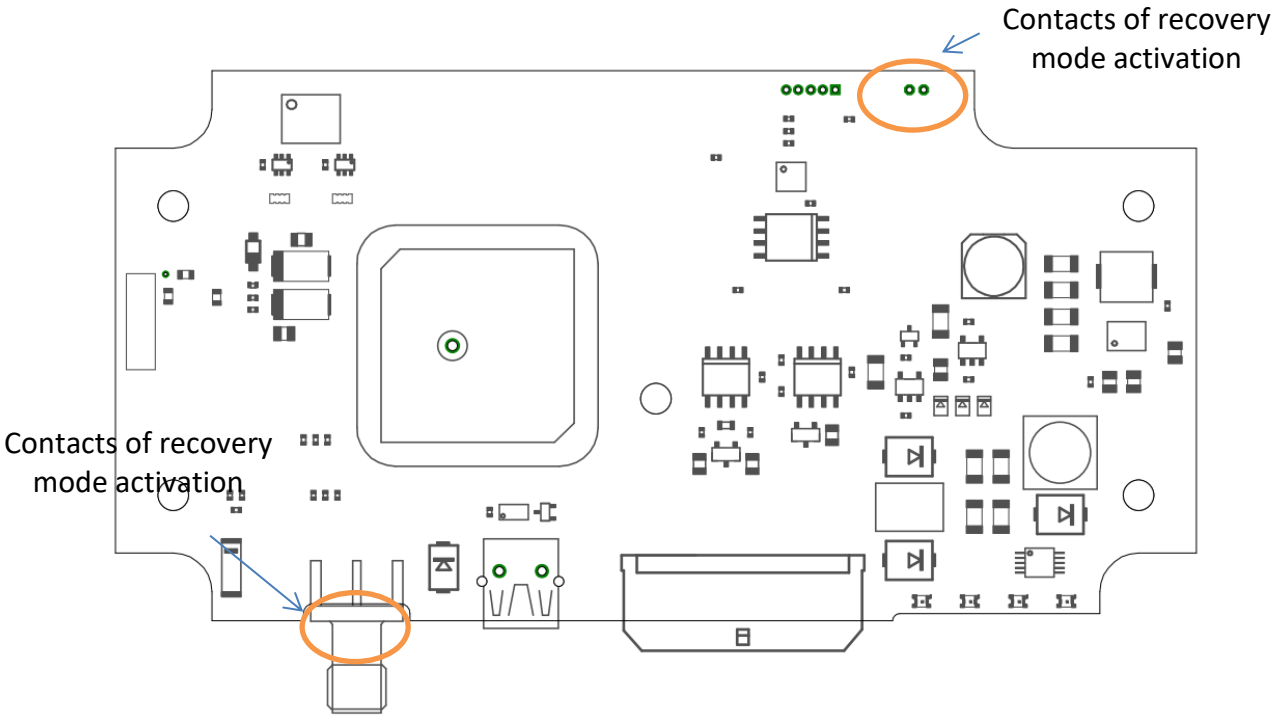

Figure 4. M7PCB

After the firmware update is completed, the tracker is restarted, then the current tracker settings are converted, and in the case of an incompatible format of the old and new version of the Black Box records, the Black Box is cleared. If the new firmware version has new settings, then their value are set to the default values. The algorithm for converting settings after upgrading the firmware to an earlier version is implemented.

6 Installation

Installation of the M1 tracker on the vehicle can be done in several ways:

1. Hidden installation. The tracker should be placed horizontally with the logo up. It is allowed to install under plastic, wooden or glass elements of the body and

interior of the car. The power of the tracker should be carried out through the interface connector from the vehicle's on-board network.

2. Open installation. The tracker is mounted inside the car interior, horizontally, with the logo upwards, on the dashboard, or at an angle of up to 90 degrees on the windshield, with the logo ahead in the direction of travel (Figure 4). The power of the tracker can be either from an on-board 12/24 V network or via a USB port from a special adapter, with a USB output of 5V, 1A.

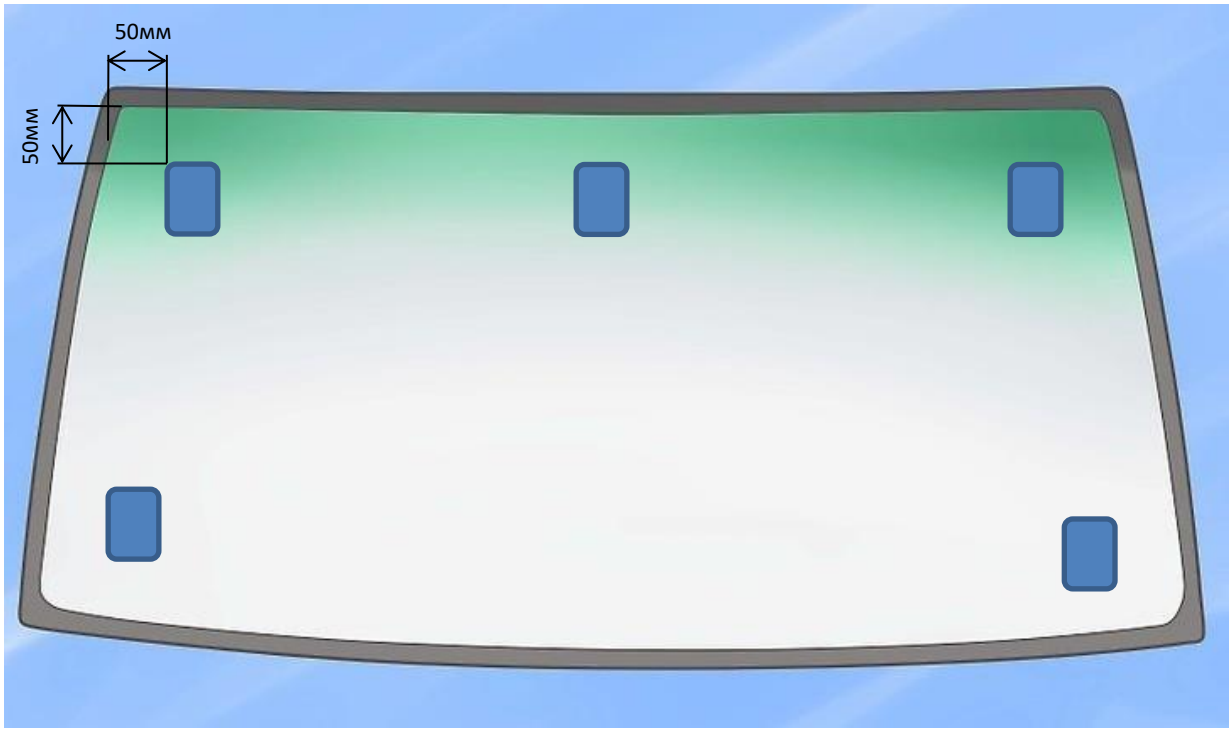

Figure 5.Variants of mounting to the windshield.

⚠ **The installation location should be selected in such a way that the upper hemisphere above the Tracker does not cover metal elements more than 50%, and any metal objects and surfaces were not closer than 50 mm.**

Tracker mount can be produced using plastic clamps or bilateral adhesive tape. Wires and cables connected to the vehicle, must be fixed by any means to avoid damaging the connectors and wire insulation from vibration and deformation.

Annex 1

General purpose commands

1. Enter the password for authentication (*pwd*)

Command format:
pwd<password>

Description:
<password> –a validpassword
Example:
Request: pwd 12345
Answer: Welcome! User logged in

2. Change password (*changepwd*)

Command format:
changepwd<old_pwd><new_pwd><new_pwd>

Description:
<old_pwd>- old password, *<new_pwd>*- new password

Example:
Request: changepwd 12345 654321 654321
Answer: New password accepted OK

3. Ending a session (*logout*)

Command format:
logout

Description:
After entering the command further work with the Tracker is only possible after entering the command *pwd*. If the user has no activity for 30 minutes a session ends automatically.
Example:
Request: logout
Answer: Good-bye! User logged out

4. Firmware version (*version*)

Command format:
version

Description:

Gets the version of the firmware and the date of the Assembly at the end of the line model Tracker (M1, M3 etc).

Example:
Request: version
Answer: ver. 2.6.1.024 30.05.2018 M1 OK

5. Restart Tracker (rebootall)

Command format:
rebootall

Description:
After you run this command, the Tracker then restarts, Ansver "OK" is not guaranteed when sending commands via SMS, Bluetooth or TCP.
Example:
Request: *rebootall*
Answer: OK

6. Module reboot/reset parameter (reset)

Command format:
reset<module/parameter>

Description:
<module/parameter> - module to be reboot/reset parameter
gsm – GSM module;
gps – Navigation module;
canlog – RS232 connected CANlog (P145);
cnt1 – Pulse counter FIN1;
cnt2 – Pulse counterFIN2;
cnt3 – Pulse counter FIN3;
cnt4 – Pulse counterFIN4;
can – built-in CAN restart;
odometer – odometer value.

Example:
Request: reset gsm
Answer: Restart GSM module OK

7. Hibernate (gosleep)

Command format:
gosleep

Description:

Sleep mode is used only for long-term storage of the appliance switched off, while Ansver "OK" is not guaranteed when sending commands via SMS, Bluetooth or TCP.

Example:
Request: gosleep
Answer: OK

8. Enable/disable echo mode (echo)

Commandformat:
echo<on/off>

Description:
This command can be executed only on the command line of Tracker and is not relevant for SMS and for TCP.

Example:
Request: *echoon*
Answer: OK

9. Firmware update (serupdate)

Command format:
serupdate<n>

Description:
<n> - the version number of the firmware for the update server.
If during an update on was not restarted the Tracker, then after some time on the monitoring server will be sent to one of the following messages:
"UPDERR: Updatecanceled" –update was canceled by a command*serupdatestop;*
"Firmwareupdatesuccessful" – successful completion of software updates;
"UPDERR: Memorywrite" – Error writing new versions of software,restart Tracker;
"UPDERR: Updatecancelledbyconfigurator" – software update is done via the Configurator;
"UPDERR: Updatestarterror" – the required number of firmware on the server not found;
"UPDERR: Pureconnection" – exhausted limit connection attempts to the server, you need to clarify the correct IP settings and port number for communication with the update server.
See commands*get/set statusupdatefw, get/set updserverip, get/set updserverport.*

Example:
Request: serupdate 320
Answer: Start update OK

10. Load factory settings (default)

Command format:

default

Description:
After the execution of commands restarts Tracker.

Example:
Request: *default*
Answer: OK

11. Request slot data (slotdata)

Command format:
slotdata<SLOT>

Description:
<SLOT> - slot name *(see setsensor)*
The command returns a string with the following format:
<DATA><OUTDATA>
<DATA>- type of output on a gauge
<OUTDATA>- measured value

Example:
Request: *slotdata r4.2*
Answer: FUEL 0 OK

12. Scanning connected on 1-Wire sensors (scanwire)

Command format:
scanwire<SLOT>

Description:
The command returns a list of the 8-byte identifiers of devices connected on the 1-Wire. If there are no connected devices, then the command returns NA

Example:
Request: *scanwire*
Answer: NA OK

Set/get commands

1. Username change (set/get loginapn)

Command format:
Set loginapn <sim> <new_login>
Get loginapn <sim>

Description:

<sim> -SIM card number,forMieltaM1always“1”
<new_login> - username

Example:
Request: *set loginapn 1 mts;getloginapn 1*
Answer: OK MTS OK

2. **Configuring a user'spassword (set/get pwdapn)**

Command format:
Set pwdapn<sim><new_pwd>
Get pwdapn<sim>
Description:
<sim> - SIM card number,forMieltaM1always “1”
<new_pwd> - user password

Example:
Request: *set pwdapn 1 mts;getpwdapn 1*
Answer: OK MTS OK

3. **Access point configuration (set/get apn)**

Command format:
Set apn<sim><new_addr>
Get apn<sim>
Description:
<sim> - SIM card number,forMieltaM1always “1”
<new_addr> - access point

Example:
Request: *set apn 1 internet.mts.ru;getapn 1*
Answer: OK INTERNET.MTS.RU OK

4. **Geting IMEI GSM module (get imei)**

Commandformat:
Get imei

Description:
Appliesonlywith*“get”.*

Example:
Request: *get imei*
Answer: 868345032128613 OK

5. Configure the PIN code of the SIM card (set/get pin)

Command format:
set pin <sim><new_pin>
get pin <sim>
Description:
<sim> - SIM card number,forMieltaM1always “1”
<new_pin> - PIN

Example:
Request: *set pin 1 1234;get pin 1*
Answer: OK 1234 OK

6. Getting data with acceleration sensor (get accel)

Command format:
Get accel

Description:
Applies only with*“get”*.
Returns three values in a range [-4095..4095] on three axes- X, Y, Z, is the value of [-8G..+8G], the fourth parameter is the result value of G with steps of 0.01, the fifth parameter is a filter State, associated with acceleration sensor:
“INIT” – the filter is not activated;
“TRAVEL” – car moving
“STOP” – the car is not moving;
“DISTURBANCE” – car leans.

Example:
Request: *get accel*
Answer: 44 -66 -496 0.98 STOP OK

7. Getting values of voltage Tracker (get syspwrdata)

Command format:
Get syspwrdata

Description:
Applies only with *“get”*.
Returns the external power voltage and USB connector voltage in volts.

Example:
Request: *get syspwrdata*
Answer: 13.568 5.063 OK

8. Getting navigation data (get satsdata)

Command format:
Get satsdata

Description:
Applies only with *"get"*.
This command returns the current navigation data

Example:
Request: *get satsdata*
Answer: 06:52:38 27.03.18 LAT 52.760361 N LON 41.312553 E SPEED 73 ANGLE 227 HEIGHT 161 SATS 10 HDOP 0.9 OK

9. Getting the number of unsent data in the black box (get bboxdata)

Command format:
Get bboxdata

Description:
Applies only with *"get"*.
Each connection has its own independent BB. The answer contains 5 numbers, each number tells you how many unsent records are in each BB. The first three are the number of unsent points for each TCP connection, the fourth is the number of points in the backup TN (must be 0), the fifth is the number of records with unsynchronized time (the records will be copied to the BB for active connections after time synchronization and will be deleted)

Example:
Request: *get bboxdata*
Answer: 854 29454 28456 0 104 OK

10. Configure monitoring server access password (set/get pwdserver)

Command format:
setpwdserver<pwd>
getpwdserver

Description:
<pwd> - the access password to the server.

Example:
Request: *set pwdserver <new_password>;get pwdserver*
Answer: OK NEWPASSWORD OK

11. Configuring the connection to the server (set/get server)

Command format:
set server <NC><EN> [<DOMAIN> [<PORT> [<PROT>]]]
get server<NC>

Description:
<NC>- number of TCP connections (0..2);
<EN>- connection status (on/off/reset);
on – work with the server allowed;
off – work with the server banned, but settings are saved;
reset – resetting the connection to the server (used only with the command *set*)
<DOMAIN> -IP or domain name server. For connection 0 the maximum length of 63 characters, 1 and 2-47 characters;
<PORT> -the port number*;*
<PROTOCOL> - the protocol used to transfer data.
Параметры*<DOMAIN><PORT><PROT>*are not mandatory. If these were specified previously, to change the status of a connection without changing your settings is enough to send a command in the format ser*ver<NC><EN>.*
<PROT> for server 0 ... 2 can take the following values: IPS_1_1, IPS_2_0 orBINARY.
If you try to deny the connection to a primary server in the message error comes Ansver.

Example:
Request: *set server 1 on google.ru 12345 IPS_2_0;get server 1*
Answer: OK ON GOOGLE.RU 12345 IPS_2_0 OK

12. Configure the list of allowed numbers (set/get phone)

Command format:
set phone <n><phone>
get phone

Description:
<n> - number of entries in the phone book (1...4), *phone* - phone number (If the phone number "-" character, then record n phone number is reset and becomes grayed out). *"get phone"* gets all phone book entries, telephone number is written in the format79051211671.The length of the number from 4 to 15 digits.

Example:
Request: *set phone 1 79151234567;setphone 2 79150000000;getphone*
Answer: OK OK 79151234567 79150000000 79004998729 79050850572 OK

13. Configuring slots (set/get sensor)

Command format:
set sensor <SLOT><TYPE><DATA><TPOINT><PERIOD><NET> (for RS485 slots)
set sensor <SLOT><TYPE><DATA><TPOINT><PERIOD><IDLOW><IDHIGH><THOLD> (for 1-Wire slots)
set sensor<SLOT><naorn/a> - release slot
get sensor<SLOT> - request a slot configuration

Description:
<SLOT>- slot number for portsRS-485 (*R4.1, R4.2, … , R4.8*) or (*OW.1, OW.2, ... , OW.8*) for 1-Wire.
<TYPE> - sensor type
<DATA>- data type supported
<TPOINT> - flag sending the measured data to the server (1 -data sent, 0 -data is not sent);
<PERIOD>- sensor poll period, seconds;
<NET> - sensor network address (for the RS-485 address range 1 .. 255, for RS-232 address is always 255)
<IDLOW> - the lower value of the range of allowed addresses devices 1-Wire, (0..4294967295)
<IDHIGH> - the upper value in the range of allowed addresses devices1-Wire, (0..4294967295).
If you want to select one device with a known address, the*<IDLOW>*must be equal to*<IDHIGH>* "get" returns settings for the selected slot. For ports RS-232 and RS-485 list returned the following settings:
<TYPE><DATA><TPOINT><PERIOD><NET>.
1-Wire port list returned the following settings:
<TYPE><DATA><TPOINT><PERIOD><IDLOW><IDHIGH><THOLD>.

Example:
Request: *set sensor r4.1 DUTOMNI status 1 1 255;get sensor r4.1*
Answer: OK DUTOMNI STATUS 1 1 255 OK

14. Configure the list of additional parameters to be sent to the server with a registered track point (set/get wlndata)

Command format:
Set wlndata {<FLAG1>}..{<FLAGn>}
Get wlndata

Description:
Data set is determined by the flags listed with a space after the command. Possible names of flags*<FLAG1>...<FLAGn>: gprs, io1,io2, gprs, accl, igns, odom*
gprs –connection state data
io1,io2 –universal ports status
accl – acceleration value in units of G with discreteness 0,01 G, while reliability is guaranteed for values up to 8 g.
Igns –ignition status
odom –odometer value
The "get" command returns a list sent to the monitoring server additional options in the package with the registered point of the track. If nothing is sent, NONE is returned.

Example:
Request: *setwlndataio1odomgprsaccl;getwlndata*
Answer: OK GPRS IO1 ACCL ODOM OK

15. Registration status in the network and connection status monitoring servers (get gsmstatus)

Command format:
Get gsmstatus

Description:
Applies only with *“get”*.
The command returns a string: *<NSIM><DET><RSSI><OPER><GPRS><SRV0><SRV1><SRV2><SRV3>*
Где*<NSIM>* - the selected SIM card slot.
<DET> - the availability status of the SIM card in the selected slot.The possible values: *DETECT*, *NDETECT*
<RSSI> - Signal level GSM network (*0..31).*
<OPER> - Code for the operator
<REG> - Registration status in the GSM network.
The possible values for the:
NO_SEARCH - not registered in the network, not looking for a network;
REG_HOME – registered in the home network;
SEARCH – not registered, search network;
DENIED - registration is prohibited;
UNKNOWN – status is not defined (usually when there is no SIM card);
REG_ROAMING – registered in roaming;
<GPRS> - statusGPRS (*GPRS_Y, GPRS_N – GPRS*on or off)
<SRV0>..<SRV3> - connection status monitoring servers and server updates.
The possible values:
AUTH – authorization is executed on the server;
CONNECTED – Tracker logged on the server;
REJECTED –the server rejected request for authorization,
PASSWORD_ERR – wrong password authorization on the server;
NO_CONNECT – no TCP connection to the server.

Example:
Request: *get gsmstatus*
Answer: SIM1 DETECT 18 25001 REG_HOME GPRS_Y AUTH NO_CONNECT NO_CONNECTNO_CONNECT OK

16. The status of the remote firmware update (get statusupdatefw)

Command format:
Get statusupdatefw

Description:
Applies only with *“get”*.
The command returns the following information about the update process: UPDATE*STATUS*, firmware number(*VER*), number of received bytes(*DOWNLOAD*), the number of attempted connections to the server for updates(*RESTCONNECTS*). *If the device is not updated, the command returnsUPDATESTATUS: FIRMWAREISNOTUPDATEDOK*.

Example:
Request: *get statusupdatefw*
Answer: UPDATE STATUS: UPDATE FIRMWARE VER: 320 DOWNLOAD: 256 BYTES RESTCONNECTS: 99 OK

17. Configuring Bluetooth (get/set btooth)

Command format:
Set btooth<pwr_mode> - setting the mode of operation
Set btoothname<name> - installing the device name
Set btoothpin<pin> - setting the PIN code to connect to the device
Get btoothcfg– gets the current settings of Bluetooth
Get btoothstate – gets the current status of Bluetooth
Get btoothmac – gets the headset MAC address
Get btoothscan – scanning visible devices

Description:
Team current Bluetooth settings returns a string:
<name><pin><pwr_mode>
<name> - the device name appears in the list of found devices in the scan. By default coincides with IMEI Tracker, the maximum length of the – 15characters.
<pin> - pin to establish a connection with the Sun Tracker, by default – 0000, possible values must be within the range[0000..9999].
<pwr_mode> - Bluetooth operation mode:
"*on*" – always on;
"*off*" – always off;
"*onrst*" – enabled until you restart Tracker.
"*ontmout*" – Bluetooth switched on for 15 minutes after submission of external power
"*speaker*" – Bluetooth is used to connect a wireless voice headset, and a MAC address must be set.
The team get the current state of the Bluetooth returns two numbers:
<status><connect>
status – a number from 0 to 25, indicating the current state of the Bluetooth module.
Special cases:
"0" – the module is not initialized
"5" –ready
connect –the presence of active connections currently.
"0" – There is no active connection
"1" – There is an active connection.

The 'get btooth scan' request returns an ERR or OK response. In the first case, you need to make sure that the 'Speaker' mode is configured, then you should send the command to start scanning before receiving an OK response. After this response, the scanning process will begin again. An ERR response may be returned if the Bluetooth module is already searching for devices. To clarify the status of the module you can use the 'get btooth' state command. Immediately after receiving the '5 0 OK' response, the 'get btooth scan' command should be sent within one second.

After you configure the Bluetooth settings, we recommend that you perform the command "*get btoothcfg*" to check whether your customizations.

Example 1:
Request: *set btooth pin 1234;setbtooth name mielta;setbtoothonrst;getbtoothcfg;getbtooth state*
Answer: OK OKOK MIELTA 1234 ONRST OK 5 0 OK

Example2:
Request: *get btoothscan*
Answer:OK

+BTSCAN: 0,1,"Redmi",38:a4:ed:f1:12:3e,-71<0D>
+BTSCAN: 0,2,"Alcatel PX",dc:f0:90:28:0a:a6,-88<0D>
+BTSCAN: 0,3,"Redmi 4x",00:ec:0a:71:01:77,-88<0D>
+BTSCAN: 1<0D>

18. Coordinate filter (set/get aclfilter)

Command format:
Set aclfilter<IS_ENABLED>
Get aclfilter

Description:
<IS_ENABLED> - Activation the filter from ignition signal.
The possible values: *ONOFF*.

Example:
Request: *set aclfilteron;get aclfilter*
Answer: OK ON OK

19. Satellites (get statsats)

Command format:
Get statsats

Description:
Applies only with *"get"*.
Returns a HEX string size of 40 bytes to fill monitoring chart visible satellites. The chart must consist of 20 elements, information about each item in the chart is contained in two bytes: the first two bytes contain the information for the first item in the chart, the second two bytes for the second, and so on.
Answer structure:
<N_SAT INF_SAT><N_SAT INF_SAT>….<N_SAT INF_SAT>
N_SAT – number of satellites (1 byte)
INF_SAT – information about the satellite (1 byte)
Byte structure INF_SAT:
The seventh bit
1 – the satellite is used in calculating the coordinates
0 – the satellite is not used in the calculation of coordinates
6..0bits - this satellite signal level (0..99)

Example:
Request: *get statsats*
Answer:
09941E924C9B2B0053001C004B9252174111080E5400078F4A911097429C02991B00059048001700 OK

20. Setting the speed range limit (set/get speedbound)

Command format:

Set speedbound<NET><BOUND>
Get speedbound<NET>

Description:
<NET> - network status:
HOME – settings for the home networking zone,
ROAMING – settings for roaming zone.
<BOUND> - boundary value for lower/upper speed range

Example:
Request: *set speedbound roaming 180;setspeedbound home 30;get speedboundroaming;getspeedbound home*
Answer: OK OK180 OK 30 OK

21. Configuring log settings track points (set/get trackcfg)

Command format:
Set trackcfg<NET><IS_TIME> {<TIME>} <IS_DIST> {<DIST>} <IS_ANGLE> {<ANGLE>} {<RANGE>} <IS_IGN>
Get trackcfg<NET>

Description:
Параметры:
<NET> - network status:
HOME – settings for the home networking zone,
ROAMING – settings for roaming zone.
<IS_TIME> - permission of track point registrationby time.
The possible values:
ON – registrationby time is permitted;
OFF – registrationby time is prohibited.
{*<TIME>*} – If*IS_TIME = ON*, the registration period is specified by the track points while the vehicle is in motion. Point in time is logged when for a given period there were no other events. If*IS_TIME = OFF*, the period is not specified.
<IS_DIST> - permission of track point registrationby distance.
The possible values:
ON –registrationby distance is permitted;
OFF – registrationby distance is prohibited.
{*<DIST>*} – If*IS_DIST = ON*, then set the distance at which the track points recorded during motion. If*IS_DIST = OFF*, the distance is not set.
<IS_ANGLE> - permission of track point registrationby angle.
The possible values:
ON – registrationby angle is permitted;
OFF – registrationby angle is permitted.
{*<ANGLE>*} – If*IS_ ANGLE = ON*, that specifies the rotation angle, at which point recorded tracks while the vehicle is in motion. If*IS_ANGLE = OFF*,the rotation angle is not specified.
{*<RANGE>*} – Selectable speed range, subject to specified in the command settings. The possible values: *LO* – the lower range, *HI* – upper range. If this parameter is not specified, then the settings apply to both the range.
<IS_IGN> - permission of track point registrationby ignition signal:

ON – registration is permitted, OFF –prohibited.

gettrackcfg<NET>
Answer:
<IS_TIME1>{<TIME1>}<IS_DIST1>{<DIST1>}<IS_ANGLE1>{<ANGLE1>}<IS_TIME2>{<TIME2>}
<IS_DIST2>{<DIST2>}<IS_ANGLE2>{<ANGLE2>} <IS_IGN>
Example:
Request: *set trackcfg home on 120 on 60 on 8 lo on;gettrackcfg home*
Answer: OK ON 120 ON 60 ON 8 ON 120 ON 200 ON 5 ON OK

22. Overspeed registration settings (set/get overspeed)

Command format:
Set overspeed<NET><IS_ENABLED><OVERSPEED><SPEED_INCREMENT>
Get overspeed<NET>

Description:
<NET> - network status:
HOME – settings for the home networking zone,
ROAMING – settings for roaming zone.

<IS_ENABLED> - permission of track point registrationby overspeed.
The possible values: *ONOFF*
<OVERSPEED> - Speed value, above which begin to register on speeding track points.
<SPEED_INCREMENT> - The increment of speed at which the recorded track points when you exceed. That is, the point of the track is saved when Speed = OVERSPEED + n* SPEED_INCREMENT.

Example:
Request: *set overspeed home on 100 5;setoverspeed roaming off;get overspeedhome;get overspeed roaming*
Answer: OK OK ON 100 5 OK OFF 110 10 OK

23. Additional data settings (set/get traffic)

Command format:
set traffic <IS_PARKING_COORD><IS_FIRST_MSG><IS_AUX_ENABLED>
get traffic

Description:
<IS_PARKING_COORD> - Send coordinates to parking mode. The possible values: *ON OFF*.
<IS_FIRST_MSG> - Send a welcome message to Tracker. The possible values: *ON OFF*.
<IS_AUX_ENABLED> - Send AUX fields. The possible values:*ON OFF*.

Example:
Request: *set traffic on off on;get traffic*
Answer: OK ON OFF ON OK

24. "Stop" mode setting (set/get stopcfg)

Command format:
Set stopcfg<NET><PERIOD><TIMEOUT>
Get stopcfg<NET>

Description:
<NET> -network status:
HOME – settings for the home networking zone,
ROAMING – settings for roaming zone.
<PERIOD> - period of registration points in stop mode (s)
<TIMEOUT> - time (min.), since the vehicle stops, after which Tracker stop mode (in which the energy saving mode is enabled).

Example:
Request: *set stopcfg home 10 3;getstopcfg home*
Answer: OK 10 3 OK

25. "Parking" mode settings (set/get parkingcfg)

Command format:
Set parkingcfg<NET><PERIOD>
Get parkingcfg<NET>

Description:
<NET> -network status:
HOME – settings for the home networking zone,
ROAMING – settings for roaming zone.
<PERIOD>- period of registration points in parking mode.

Example:
Request: *set parkingcfg home 60;getparkingcfg home*
Answer: OK 60 OK

26. Coordinates filter setting (set/get gpsfilter)

Command format:
Set gpsfilter<MAX_HDOP><MIN_SATS>
Get gpsfilter

Description:
<MAX_HDOP> -The maximum value of HDOP, above which the coordinates are not valid.
<MIN_SATS> -The minimum number of satellites, for which the defined coordinates are considered valid.

Example:
Request: *set gpsfilter 3.5 5;getgpsfilter*
Answer: OK 3.5 5 OK

27. Configure the ignition signal (set/get igncfg)

Command format:
Set igncfg<IS_ENABLED> {<LOW_VOLTAGE>} {<HIGH_VOLTAGE>}
Get igncfg

Description:
<IS_ENABLED> - permission of coordinates filterby ignition signal. The possible values: *ONOFF*.
{*<LOW_VOLTAGE>*} -the lower bound of the hysteresis for enabling/disabling the ignition
{*<HIGH_VOLTAGE>*} -the upper bound of the hysteresis for enabling/disabling the ignition.
The ADC channel, which is used to control the ignition, is automatically selected, depending on the operating modes of the universal ports. To use one of the universal ports for ignition control, enable the corresponding mode for this port (see set iomode). If none of the universal ports is operating in the ignition control mode, then the terminal uses the voltage of the external power source to control the ignition.

Example:
Request: *set igncfg on 10.5 12;getigncfg*
Answer: OK ON IO2 10.5 12.0 OK

28. Setting the mode of uploading tracks (set/get uploadcfg)

Command format:
Set uploadcfg<NET><MODE> {<TIME>}
Get uploadcfg<NET>

Description:
<NETWORK> - Network selection for which settings.
The possible values: *HOME, ROAMING*
<MODE> -Uploading mode.
The possible values:
FAST -The point of the track is uploaded immediately after registration;
PACKET - Several points are generated in the packet before being sent to the server;
SCHEDULE- periodic uploading track on schedule.
{*<TIME>*} – FAST mode is not used, for PACKET mode-maximum permissible delay sending track points (s), SCHEDULE mode-GPRS-session activation period and uploading track (m).

Example:
Request: *set uploadcfg home fast;get uploadcfg home*
Answer: OK FAST OK

29. Energy saving mode activation on parking (set/get nrgsave)

Command format:
Set nrgsave<IS_ENABLED>

Get *nrgsave*
Description:
<IS_ENABLED> - The possible values: ONOFF.

Example:
Request: *set nrgsaveon;get nrgsave*
Answer: OK ON OK

30. Sleep mode activation by accumulator voltage (set/get extaccsleep)

Command format:
Set extaccsleep<IS_ENABLED> {<GOSLEEP_VOLT>} {<WAKEUP_VOLT>}
Get extaccsleep

Description:
<IS_ENABLED> - The possible values: *ONOFF*.
{<GOSLEEP _VOLT>} {<WAKEUP _VOLT>} –threshold voltage on the battery to go to sleep and to wake from sleep. Values are specified only when IS_ENABLED = ON. Minimum voltage transition into sleep mode shall be not less than the minimum difference of 9V, voltage thresholds (hysteresis) shall be not less than 0.1 in.

Example:
Request: *set extaccsleep on 10 12;get extaccsleep*
Answer: OK ON 10.000 12.000 OK

31. SIM-card ICCID (get iccid)

Command format:
Get iccid

Description:
The opportunity to obtain this identifier may not always be available, for example, a negative balance or, in the absence of communication. In these cases, the command can return Ansver "NA".
Example:
Request: *get iccid*
Answer: 89701012656602779599 OK

32. Mobile Network location data (get lbsdata)

Command format:
Get lbsdata

Description:
Applies only with *"get"*.
Answer:
*<RXL><MCC><MNC><CellID><LAC><TA>*OK
<RXL> - Receive quality, dBm.

<*MCC*> -Mobile Country Code
<*MNC*> -Mobile Network Code.
<*CellID*> -CID
<*LAC*> -Location Area Code(HEX)
<*TA*> -Timing Advance.
If the data is unavailable or there is no GSM signal, then the command returns Answer NA OK

Example:
Request: *get lbsdata*
Answer: -35 250 1 B08 BBA255 OK

33. Track points registration by acceleration (set/get drivequal)

Command format:
Set drivequal<NET><en><G>
Get drivequal<NET>

Description:
<*NET*> -network status:
HOME – settings for the home networking zone,
ROAMING – settings for roaming zone.
<*en*> - permission flag (*on, off*)
<*G*> - acceleration threshold above which will register an extraordinary point of the track is defined with a precision of 0.1.The possible valuesfrom 1.1 to 8.0.
The "get" command returns <*en*><*G*>

Example:
Request: *set drivequal home on 5.4;get drivequal home*
Answer: OK ON 5.4 OK

34. Track points registration by iButton ID (set/get ibevent)

Command format:
Set ibevent is1 is2 is3 is4 is5 is6 is7 is8
Get ibevent

Description:
Registers the point track in obtaining ID from the iButton or Matrix.
Description:
is1..is8– permits the registration point for the corresponding slotsOW1..OW8.
The possible values: ON, OFF.

Example:
Request: *set ibevent on on off off on on off off;get ibevent*
Answer: OK ON ON OFF OFF ON ON OFF OFF OK

35. «Delta Eurosens» flow meter settings (set/get esnsparam)

Command format:
Set esnsparam{<N1>}..{<N39>}
Get esnsparam

Description:
<N1>..<N39> – the list of parameters to send to the server.

Example:
Request: *set esnsparam 10 11 12 15;get esnsparam*
Answer: OK 10 11 12 15 OK

36. «Delta Eurosens» flow meterdata (get esnsdata)

Command format:
Get esnsdata {<N1>}..{<N39>}

Description:
Applies only with *"get".*
<N1>..<N39> – list of read parameters.

Example:
Request: *get esnsdata 2 1 3 4 5*
Answer: 0 90 1 118 0 OK

37. «Delta Eurosens» flow meter black box capacity (get esnsspace)

Command format:
Get esnsspace

Description:
Applies only with *"get".*
The command returns the amount of memory available for recording in the black box with the current settings.

Example:
Request: *get esnsspace*
Answer: 43 OK

38. White and black list of mobile network operators (get/set operpr/dis)

Command format:
Set operpr [<OPER_PR1>] .. [<OPER_PR20>]
Set oper dis [<OPER_DIS1>] .. [<OPER_DIS10>]

Get operpr
Get oper dis

Description:
Command allows you to create a list of priorities and prohibited operators of GSM roaming.
<OPERS_PR>, <OPERS_DIS> - codes of priority and prohibited operators. Codes are specified via space. You can save 20 priority and 10 prohibited codes.

Example:
Request: *set operpr 25001 357798 333888 25002 33445;getoperpr*
Answer: OK 25001 357798 333888 25002 33445 0 0 0 0 0 0 0 0 0 0 0 0 0 0 OK
After the command*setoperpr/dis*previous operator codes are reset.
To clear the tables of codes of operators can send the commands without the list of operators:
Request: *set operpr;setoper dis*
Answer: OKOK

Check the result by using the commands*getoperpr;getoperdis*.

Request: *get operpr;get oper dis*
Answer: *0 0 0 0 0 0 0 0 0 0 0 0 0 0 0 0 0 0 0 0 OK 0 0 0 0 0 0 0 0 0 0 OK*

39. Operation mode of universal ports (get/set iomode)

Command format:
Get iomode
Set iomode<ionum><mode>

Description:
Returns the mode of operation of universal ports.
<iomode1>- Universal port 1 operation mode
<iomode2> - Universal port 2 operation mode
<iomode3>- Universal port 3 operation mode
<iomode4> - Universal port 4 operation mode
A list of profiles, see the command "set iomode" description.

Parameters:
<ionum> : - the port number
1 - Universal port 1
2 - Universal port 2
3 - Universal port 3
4 - Universal port 4
<mode> : Universal port operation mode
ain<fltr>- analog input mode (0..30 V). This mode has an optional parameter - the filtering value [0..10]. If this parameter is absent or equal to zero, filtering is disabled. If the parameter value is greater than zero, then a smoothing filter is applied to the measured values.
ignctrl - ignition control (only one of the inputs)
freq- frequency input(0..40000 Гц)
lowfreq - low frequency mode (0 .. 40 Hz, 0.1 Hz increments)

cntrise<fltr> - counter on the rise of pulse. This mode has an optional parameter - debounce time [0..100]. If the parameter is absent or equal to zero, the filter is disabled. If the parameter value is greater than zero, then the terminal applies an anti-debounce filter.
cntfall<fltr> - counter on the fall of pulse. This mode has an optional parameter - debounce time [0..100]. If the parameter is absent or equal to zero, the filter is disabled. If the parameter value is greater than zero, then the terminal applies an anti-debounce filter.
din - discrete input
enc - Encoder mode
dout_on - digital output: output is shorted to ground (open collector)
dout_off - digital output: output free (open collector)
ibutton<owslot> -discrete output: iButton triggered. This mode has a mandatory parameter - the slot number of 1-Wire, the appearance of the key in which will cause the switching of the output.
The possible valuesпараметра:*ow.1 .. ow.8*
alarm<txtmsg | notxtmsg> -alarm button. If *txtmsg* is specified as a parameter, the track point will be registered when the alarm button is pressed and a text message is generated indicating the universal port on which the alarm button worked, as well as the date and time of the alarm button activation. If *notxtmsg* is specified as a parameter, only the track point will be registered when the alarm button is triggered. A text message is not generated.
Note. Because the encoder mode assumes the use of two universal ports of the tracker (io1 + io2), it is impossible to enable the encoder mode for that pair of universal ports of the tracker, one of whose ports is used for connecting the alarm button, as an ignition control input or an output controlled by the iButton key. When trying to turn on the encoder mode, the tracker will generate warnings : "WARN : Alarm input", "WARN : IgnCtrl input" или "WARN : iButton out".

Example:
Request: *getiomode*
Answer: ainfreqOK
Request: *set iomode1ain*
Answer: *OK*

40. Universal port data (get iodata)

Command format:
Get iodata

Description:
<iodata1> - universal port data № 1
<iodata2> - universal port data № 2

For the "Analog Input" mode, the voltage value is output with three decimal places. For "Counter", "Encoder", "Frequency Input", "Digital Input" and "Digital Output" modes, the value is displayed as an integer. For the "Low-frequency measurement" mode, the value is given with one decimal point. For a list of modes, see the command description "*setiomode*".

Example:
Request: *get iodata*
Answer:*12.3462345OK*

41. Setting the odometer mode (get/set odmmode)

Command format:
Get odmmode
Set odmmode<mode>

Description:
The command allows you to configure the odometer value sent to the statistics server.
<mode> is the type of value sent to the monitoring server. Possible values:
“ABS” - send the absolute value to the statistics server (in kilometers with a 1-m resolution),
“REL” - send a relative value to the statistics server (in meters with 1 mm resolution).

Example:
Request: set odmmode REL;get odmmode
Answer:OK REL OK

42. Getting the odometer value (get odometer)

Command format:
get odometer

Description:
Applies only with *"get".*
The command allows to get the total traveled distance in meters. To reset the odometer, use the *‘reset odometer’* command.

Example:
Request: *get odometer;resetodometer*
Answer:665452 OK Resetodometer OK

43. Enable/disable track points uploading in roaming (get/set roamingupload)

Command format:
Set roamingupload<on/off>
Get roamingupload

Description:
The command allows you to disable or enable track points unloading while roaming.

Example:

Request: *set roaminguploadon;get roamingupload*
Answer: OK ON OK

Diagnostic commands

1. GPS module diagnostics (diag gps)

Command format:
Diag gps

Description:
The command returns the following GPS module diagnostic data:
<stInit>,<maxTI>,<nMRst>[R1:R2:R3:R4],<nBRst>,<nSTout>,<nTaf>,<mDt>,<nRxMsg>
[M1:M2:M3:M4:M5:M6:M7:M8],<nIES>,<fM> [fM1: fM2: fM3: fM4: fM5: fM6: fM7: fM8]
<stInit> - GPS module initialization status (nominal state is 0x1f)
<maxTI> - maximum time of the last GPS module initialization in seconds.
<nMRst> - the number of reloads of the GPS module since the power was turned on;
R1 – number of manual module restarts;
R2 – number of restarts due to long absence of coordinates;
R3 – number of restarts due to the receipt of the wrong time from the module;
R4 – number of module hangs;
<nBRst> - number of restarts of the receiving buffer;
<nSTout> - number of delays in the arrival of data from the module;
<nTaf> - the number of cases of the desynchronization of the GPS time and tracker, two numbers mean the number of cases of the clock out of synchronization "into the past" and "into the future" relative to the internal clock of the tracker;
<mDt> - maximum desync time in seconds;
<nRxMsg> - number of received and processed messages from the module;
<M1..M8> - the number of received messages with the prefixes "GGA", "GLL", "GSA", "GSV", "RMC", "VTG", "ZDA", "$PMTK" respectively.
<nIES> - the counter of successful and erroneous reinitializations and the counter of hibernation;
<fM> - the average number of messages received from the module per second (should be about 10);
<fM1..fM8> - the average frequency of messages with prefixes "GGA", "GLL", "GSA", "GSV", "RMC", "VTG", "ZDA", "$PMTK".

Example:
Request: *diag gps*
Answer: stInit=0x1f,maxTI=7,nMRst=2[0:1:0:0],nBRst=1,nSTout=0,nTaf=0,1,mDt=1,nRxMsg=131355,131354, [14063:0:28128:75098:14064:0:0:1] nIES=2,0,0,fM=9.33,[1.00:0.00:2.00:5.33:1.00:0.00:0.00:0.00] OK

If the GPS module is correctly initialized, the *stInit* parameter must be 0x1f, the initialization time of the module is a few seconds, in this case 7 seconds. There should be no spontaneous module restarts, a low frequency of messages from the module (fM<8) indicates problems with receiving signals from satellites.

2. Statistics of the RS485 slot (diag rs485)

Command format:
diagrs485 {N_SLOT}

Description:

N_SLOT = 1..8. The value 1 corresponds to slot R4.1, Value 8 corresponds to slot R4.8).
The command returns the counter for executing the main cycle of the application thread responsible for the RS485 bus (nLps); the number of successful data requests on the bus (OkRq); The number of read / write errors for each slot (SlotIoFails) is listed through the colon; slot, which will display the I/O buffers in hexadecimal form (Slot); Transmit slot buffer (TxBuf); receive slot buffer (RxBuf).

Example:
Request: *diagrs485 1*
Ansver: nLps=404513,OkRq=404514,SlotIoFails=0:0:0:0:0:0:0:0,Slot=R4.1 TxBuf:0x3101066C, RxBuf:0x3E010600550D85CD64 OK

3. Statistics of the internal clock (diag rtc)

Command format:
Diag rtc

Description:
Answer: <DateTime>, TTime =<TTime>, OTime=<OTime>, SGsm=<SGsm>, SGps=<SGps>, MaxDSyns=<MaxDSyns>, TimeMaxDSyns=<TimeMaxDSyns>
<DateTime>The current system date and time, this data can be used to compare the system time of the tracker and the time coming from the navigation satellites. In this case, it is appropriate to send two commands at the same time: get datetime; diagrtc. The time difference is not more than 1 second if there is a signal from the satellites. If the discrepancy is significant, then you need to enable the system time auto-tuning mode (see*set trimrtc*)
<TTime> - Total time of the tracker in seconds from the moment of restart;
<OTime> - The total operating time of the OS scheduler. The ratio of OTime / TTime should not be less than 0.99;
<SGsm> - Event counter for adjusting the system time for base stations. Ideally, this parameter should be 0 or 1 if there is a signal from satellites;
<SGps> - The counter of events of adjustment of system time by satellites. Ideally, this parameter should be 1.
<MaxDSyns> - maximum time of out of sync system time and UTS,
<TimeMaxDSyns> -UNIX time of the maximum time out of sync with UTS.

Example:
Request: *dia grtc*
Answer: 7.03.18 07:40:44,TTime=404934,OTime=404528,SGsm=6,SGps=7,MaxDSyns=7,TimeMaxDSyns= 1521964902 OK

4. Statistics of GSM module operation (diag gsm)

Command format:
Diag gsm

Description:
Answer:

timeOn=<timeOn>,timeGsm=<timeGsm1>(<timeGsm2>),timeSrv=<timeSrv1_0>(<timeSrv2_0>),<timeSrv1_1>(<timeSrv2_1>),<timeSrv1_2>(<timeSrv2_2>),<timeSrv1_3>(<timeSrv2_3>),Vcc=<Vcc>[VccMin..VccMax],Rst=<Rst>,nSrvConn=<nSrvConn0><nSrvConn1><nSrvConn2><nSrvConn3>,nRxTcpPkt=<nRxTcpPkt0><nTxTcpPkt1><nTxTcpPkt2><nTxTcpPkt3>SimTxBuf: <SimTxBuf>SimRxBuf: <SimRxBuf>OK

<*timeOn*> - total time (sec) of continuous work of the tracker for the last day;
<*timeGsm1*> - time (sec) of a continuous location in the coverage area of the GSM network;
<*timeGsm2*> - total time in the network for the last 24 hours or after the power supply;
<*timeSrv1_0..timeSrv1_3*> - time (sec) of continuous communication with the monitoring server 0..2 or with the update server (connection №3);
<*timeSrv2_0..timeSrv2_3*> - the total time spent on communication with the statistics server 0..2 or with the update server (connection №3) for the last day or after the power supply;
<*Vcc*>, <*VccMin*>, <*VccMax*> - current, minimum and maximum supply voltage of the GSM module in millivolts;
<*Rst*> - number of GSM program reset;
<*nSrvConn0..nSrvConn3*> - the number of attempts to connect to the monitoring server (0..3) and the update server (connection №3);
<*nRxTcpPkt0..nRxTcpPkt3*> - the number of TCP packets received from the monitoring server and the update server (connection №3). The number of sent points can be requested using the *diag protocol* command.
<*SimTxBuf*> - the last sent command to the GSM-module (no more than 25 characters, all others are cut off);
<*SimRxBuf*> - the last received Ansver from GSM-module (no more than 25 characters, all others are cut off).
Statistics is reset after 84,600 seconds (day) after the tracker is turned on or restarted and accumulated again.

Example:
Request: *diag gsm*
Ansver: tOn= 58754,tGsm=27424(54165),Vcc=4202[3900..4213],Rst=3,tSrv=101(53990) 0(0) 0(0) 0(0) nSC=7 0 0 0 nRxTcp=3493 0 0 0 simTxBuf: simRxBuf: OK

5. Statistics of the black box (diag bbox)

Command format:
Diag bbox

Description:
The command returns the statistics of work with the black box.
Answer:PF=<PF0 PF1 PF2 PF3 PF4>, PC=<PC0 PC1 PC2 PC3 PC4>, RS=<RS0 RS1 RS2 RS3 RS4>, Ri=<Ri>, RL=<RL>, WS=<WS>, ERR=<ERR>, Cl=<Cl>, TL=<TL>,DT=<DT>,OTW=<OTW>

<PF0..PF3> - the number of entries in the black box at the time of the start of the software for each statistics server and for uploading through the configurator (PF3);
PF4 – number of points with an unsynchronized time at the time the tracker was launched
<PC0..PC3> - the current number of unsent records for each server;
PC4 – number of points with an unsynchronized time at the current moment
<RS0..RS4> - counters successfully read entries;

<Ri> - re-initialization counter;
<RL> - counter of instances of cancellation of reading of a point (for prevention of overflow of the TCP-buffer);
<WS> - the counter of successfully saved points (each point is saved simultaneously for all servers);
<ERR> - error counter;
<Cl> - full erasure counter;
<TL> - Unix time of the moment when the point was recorded after the last longest recording delay.
<DT> - The maximum delay between the record points after the restart of the tracker. In normal operation, this number must not exceed the value of the interval parameter for recording points during parking;
<OTW> - the counter of the delayed recording of the point for a time longer than 10 seconds after the moment of recording according to the schedule.

Example:
Request: *diag bbox*
Answer: PF=0 0 0 0 0 PC=0 0 0 0 0 RS=2285 0 0 0 0 Ri=1 RL=68 WS=2258 ERR=0 Cl=0 TL=1522105225 DT=183 OTW=0 OK

6. Statistics of sending points to the server (diag protocol)

Command format:
Diag protocol

Description:
Ansver:
PT=<PT0 PT1 PT2 PT3>,PS=<PS0 PS1 PS2 PS3>,PD=<PD0 PD1 PD2 PD3>,BI=<BI0 BI1 BI2 BI3>
<PT0..PT3> - total number of sent points, incl. repeated
<PS0..PS3> - the number of successfully sent out points should coincide with the number of successfully readings;
<PD0..PD3> - number of sent fragments of TCP records, is relevant for version with support for PressureProPulse;
<BI0..BI3> - Number of re-initializations due to unrecognized record types.
This command is recommended to be used together with the command*diagbbox.*

Example:
Request: *diag protocol*
Answer: PT=2288 0 0 0 PS=2261 0 0 0 PD=0 0 0 0 BI=0 0 0 0 OK

7. Track points registration statistics (diag track)

Command format:
Diag track

Description:
Answer: Total: <Total> 0:<0> 1:<1> 2:<2> 3:<3> 4:<4> 5:<5> 6:<6> 7:<7> 8:<8> 9:<9>A:<A>B:<B>
<Total> - total number of registered points
<0> - number of point registration errors
<1> - the first point after the power supply, must always be a value of 1

<2> - the number of points registered with the iButton ID change
<3> - the number of points registered by a change in direction (azimuth)
<4> - number of points registered by distance
<5> - the number of points registered by the event "Start"
<6> - the number of points registered by the event "Stop"
<7> - number of points registered by time
<8> - the number of points registered for overspeeding
<9> - the number of points registered by pressing the "alarm button"
<A> - number of points recorded for exceeding acceleration
<B> - the number of points registered by changing the status of the ignition.
After one of the counters reaches the value of 65535, all the counters are reset.

Example:
Request: *diag track*
Answer: Total:2261 0:0 1:1 2:0 3:919 4:243 5:245 6:555 7:298 8:0 9:0 A:0 B:0OK

Standard parameter data

№	Parameter	Description
1	speed	Movement speed
2	latitude	Height above sea level
3	sats	satellites count
4	course	course (directionoftravel)
5	lat	Geographic latitude
6	lon	Geographic longitude
7	time	UNIX-time of a message
8	inN	digital input, where N is the input number
9	outN	digital output, where N is the output number
10	adcN	analog input, where N is the input number

Additional parameter data

№	Parameter	Description
1	pwr_ext	Vehicle voltage
2	aux	A 32-bit word is displayed in hexadecimal. It is intended to display additional information about the current status and diagnose problems. A 32-bit aux field is treated as a collection of bit fields. Each area of significant bits in a word has its purpose: Bits 0..3 define the record number in a packet with coordinate points sent to the Wialon server Bits 4..19 - the number of the packet sent to the Wialon server Bits 20..27 - the event by which the track point is registered. The possible values: 0x01 - First registered point with valid coordinates 0x02 - Point registered with iButton event 0x03 - The point is registered by the rotation angle 0x04 - The point is registered for the distance traveled 0x05 - Point registered for stop 0x06 - Point registered at start 0x07 - The point is registered for idle time 0x08 - The point is registered by overspeeding 0x09 - The point is registered by the alarm button 0x0A - The point is registered by exceeding the specified acceleration 0x0B - Point registered for ignition on / off Bits 28..31 - Validity of the determination of coordinates (0 - coordinates are not valid, 1,2 - coordinates are valid)
3	F1, F2	The frequency measured at the frequency input 1 or 2
4	R4.1…R4.8	RS-485 corresponding slot data
5	OW.1…OW.8	1-Wire corresponding slot data
6	R4.1.1,R4.1.2 … R4.8.1,R4.8.2	Data from the sensors when obtaining pair parameters
7	Gsim	SIM card activity: 1 - sim card active, 0 - sim card is inactive or not installed.
8	Grssi	GSM signal level. (0 ... 31)
9	Gregst	The status of registration in the network: 0 - no network, 1 - home network, 2 - network search, 3 - operator refused registration, 4 - unknown status, 5 - roaming.

10	Gcipst	A three-bit number. Bit 0..2 - connection activity status 0..2. The set bit indicates that there is a connection to the servers 0..2.
11	Gsrvst	A three-bit number. Bit 0..2 - authorization status on the server 0..2. 0 – no authorization, 1 – authorization is passed.
12	Gupdst	0 - the software is not updated, 1 - the software update is in progress.
13	Accel	The acceleration value in units of G (0.00 ... 13.00), while the values are up to 8G.
14	StAccel	Vehicle motion status (0 - unknown state, 1 - movement, 2 - stop or parking mode, 3 - sharp turn)
15	Ign	Ignition status (0 - ignition off, 1 - on)
16	Odm	Odometer distance in meters

List of supported devices and protocols

№	Devicetype	Interface	Protocol	Data type	Sensor name
1	DUTOMNI	RS485	LLS	FREQ TEMP FUEL	MieltaДУТ-3404
2	DUTOMN2	RS485	LLS	FREQ TEMP FUEL	Omnicomm LLS30160
3	IBUTTON	1-Wire	iButton	ID	Dallas DS-199x
4	DS1820	1-Wire	DS1820	TEMP	MieltaДТ-3402
5	DUMLT	RS485	Mielta	ANGLE	MieltaДУ-3403
6	LCDMLT	RS-485	Mileta	STATUS	MieltaДС-1502
7	MATRIX	1-Wire	iButton	ID	Iron-Logic MATRIX III
8	RFIDMLT	1-Wire	Mielta	ID	MieltaCPM-3303-04
9	AUTOSNS	RS-485	LLS	TEMP PARAM1 PARAM2	ДУТ-КВ-Р01
10	ZET7012	RS-485	Modbus	PRESS	Zetlab Zet7012
11	RFMLT2	RS-485, 1-Wire	Mielta, iButton	ID	ReaderRFID Mielta